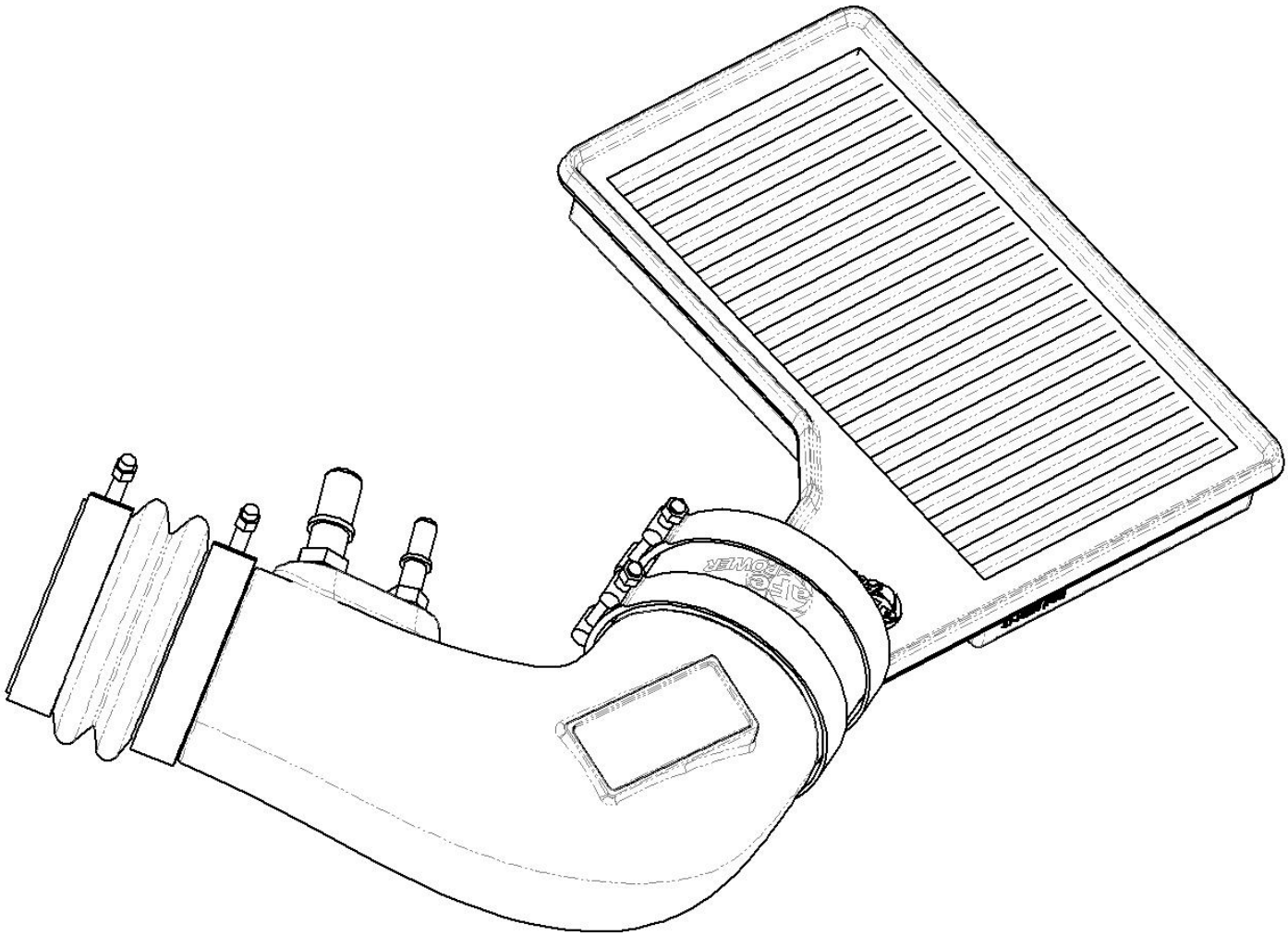

advanced FLOW engineering

Super Stock Air Intake System

Instruction Manual

P/N: 55-10009D / 55-10009R

Make: **Jeep**	Model: **Wrangler JL**	Year: **2018-2023**	Engine: **V6-3.6L**
Make: **Jeep**	Model: **Gladiator JT**	Year: **2020-2023**	Engine: **V6-3.6L**

- **Please read the entire instruction manual before proceeding.**
- **Ensure all components listed are present.**
- **For technical support please call 951-493-7185.**
- **Ensure you have all necessary tools before proceeding.**
- **Do not attempt to work on your vehicle when the engine is hot.**
- **Retain factory parts for future use.**

Label	Qty.	Description	Part Number
A1	1	Air Filter (Pro 5R)	30-80280
A2	1	Air Filter (Pro DRY S)	31-80280
B	1	Tube	05-5510009B1
C	1	Coupling, Silicone Bellow: 3-1/4”ID x 2-1/2”L	05-01416
D	1	Coupling, Silicone Bellow: 3-1/4"ID x 3"L	05-01566
E	4	Clamp, 048 (2-9/16” – 3-1/2”)	03-50265
F	2	Grommet, Rubber	03-50167
G	1	Fitting, Air Temp Sensor	05-01454
H	1	Fitting, Vent Tube	05-01339

Installation will require the following tools:

8mm nut driver, 10mm deep socket and driver, cutting pliers.

Warranty information available at https://afepower.com/contact#warranty.

Emissions Disclaimer: This product is not currently CARB exempt and is not available for purchase in California or for use on any vehicle registered with the California Department of Motor Vehicles.

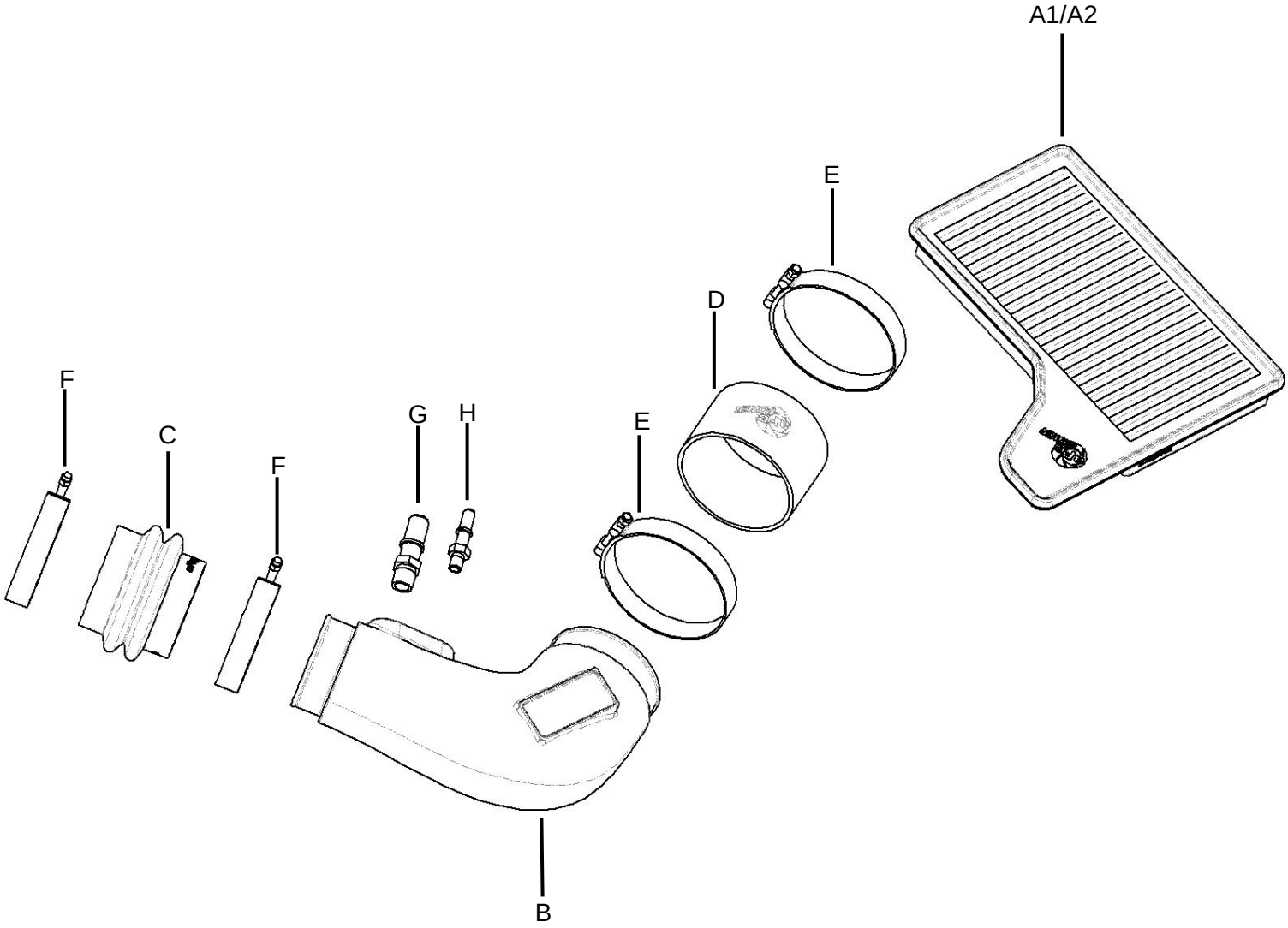
A1/A2
E
D
F
C
F
G
H
E
B

Figure A

Refer to Figure A for Steps 1-5

Step 1: Release the two clamps (1) that secure the factory upper housing.

Step 2: Lift the factory air filter from the factory lower housing and remove.

Step 3: Clean any dirt and debris from the factory air filter housing to make sure no dirt enters the engine.

Step 4: Install the aFe POWER OER air filter. Be careful when installing not to crimp the edges of the aFe POWER air filter between the factory upper and lower housing. This could cause air filter damage and allow unfiltered air to enter the engine if not properly seated.

Step 5: Replace the factory upper housing by engaging the two clamps (1) to secure the factory upper housing to the factory lower housing.

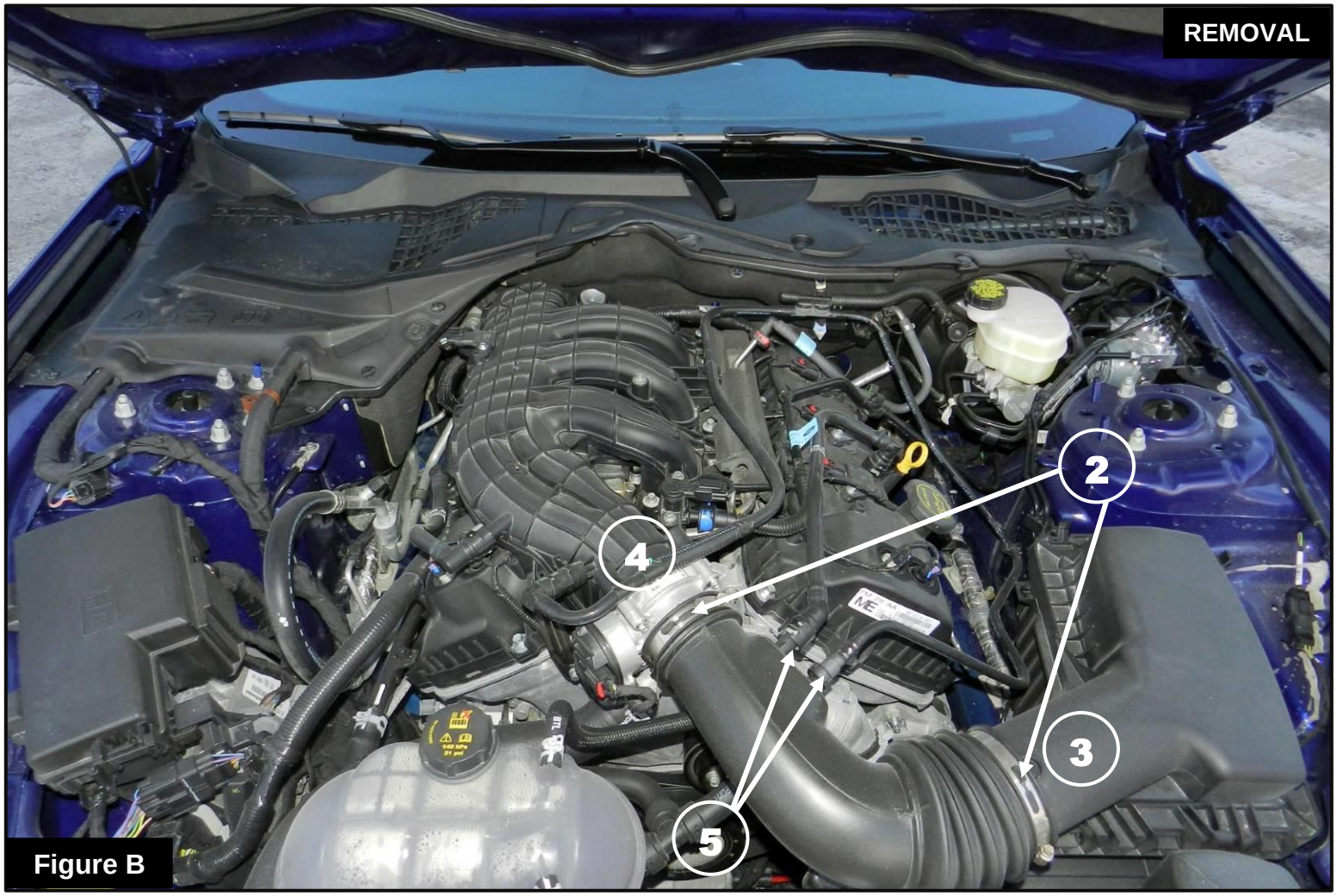

Figure B

Refer to Figure B for Steps 6-8

Step 6: Locate the two factory clamps (2) on the factory intake tube. Using a 7mm nut driver, loosen the clamps at the housing (3) and at the throttle body (4).

Step 7: Disconnect the vent fittings (5) on the back of the factory intake tube.

Step 8: Remove the factory intake tube from the vehicle.

Refer to Figure C for Steps 9-11

Step 9: Install the small vent tube fitting (6) and large vent tube fitting (7) into the locations shown on the aFe POWER intake tube and tighten them using an adjustable wrench.

***NOTE:** Exposed threads shown are normal. This is an NPT thread.

Step 10: Install the silicone bellows coupling (8) onto the aFe POWER intake tube in the location shown and snug (but do not tighten) the T-Bolt (TB337SS) clamp using the 11mm deep socket and driver.

Step 11: Install the silicone wrapped coupling (9) onto the aFe POWER intake tube in the location shown and snug (but do not tighten) the T-Bolt (TB412SS) clamp using the 11mm deep socket and driver.

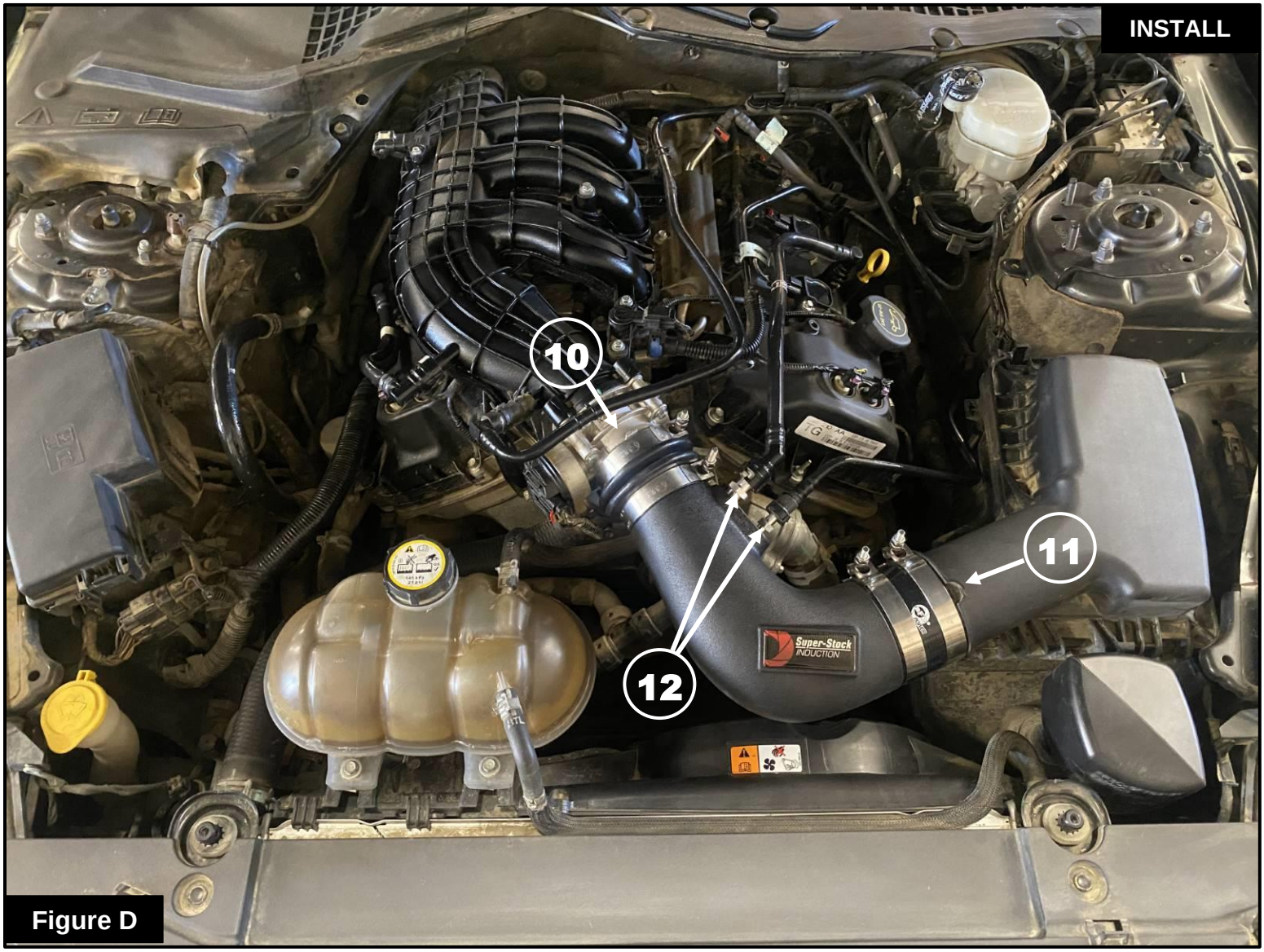

Figure D

Refer to Figure D for Steps 12-16

Step 12: Install the tube by starting with the silicone bellows coupling at the throttle body (10) and snug (but do not tighten) the T-Bolt (TB337SS) clamp using the 11mm deep socket and driver.

Step 13: Slip the silicone wrapped coupler over the factory housing (11) and snug (but do not tighten) the T-Bolt (TB412SS) clamp using the 11mm deep socket and driver.

Step 14: Connect the small and large vent tube fittings (12) to the aFe POWER intake tube. Make sure all fittings and hoses are fully seated and will not disconnect.

Step 15: Align the aFe POWER intake tube and couplings, then tighten the T-Bolt clamps.

Step 16: Your install is now complete!

NOTE: Check all bolts, clamps, and connectors after 100-200 miles.

advanced FLOW engineering, inc.
Corona, CA 92879
https://afepower.com/contact